Non Contact Thermometer Calibrator

OB-15/2 BBC

- Blackbody cavity with emissivity higher than 0.99 in a calibration fluid bath
- Metrological uniformity and stability in mK range
- Ready-to-fit reference PRT or SPRT for monitoring fluid stability
- Temperature range:
  - 30 °C ... 130 °C
  - 0 °C ... 130 °C when connected to a circulating cooler
- Various standard and tailored blackbody cavity shapes available
- Ready to run in benchtop design

Non Contact Thermometry

Temperature

CiK SOLUTIONS
IMPROVING QUALITY

For more information, visit
www.cik-solutions.com
or contact us at
info@cik-solutions.com

Kambič

Technical Data:	OB-15/2 BBC
Width	534 mm
Height	534 mm
Depth	474 mm
Working chamber dimensions	Φ 225 x h 270 mm
Volume	~ 15 L
Temperature range	30 °C … 130 °C, 0 °C … 130 °C when connected to a circulating cooler
Temperature Stability	± 0.002 °C @ 30 °C
	± 0.002 °C @ 37 °C
	± 0.002 °C @ 50 °C
	± 0.003 °C @ 70 °C
Temperature homogeneity	± 0.007 °C
Display resolution	0.001 °C
Set-point resolution	0.001 °C
Controling temperature probe	PT 100
Temperature control	PID
Power supply (± 10%)	230 V / 50-60 Hz / 5 A
Wattage	1100 W
Communication port RS 232	Built-in
Cooling	Ready for connection to a circulating cooler
Construction materials	SS vessel and exterior housing
Overflow catch pot	included
Weight	41 kg

Options:

BB - EXERGEN

BB-CN

BB - CN+EXERGEN

BB - ASTM

BB - JIS T

BB - EN

For more information, visit
www.cik-solutions.com
or contact us at
info@cik-solutions.com

1. Blackbody opening
2. Reference sensor opening
3. Height-adjustable shelf for reference sensor
4. Blackbody cavity

Dimensions:

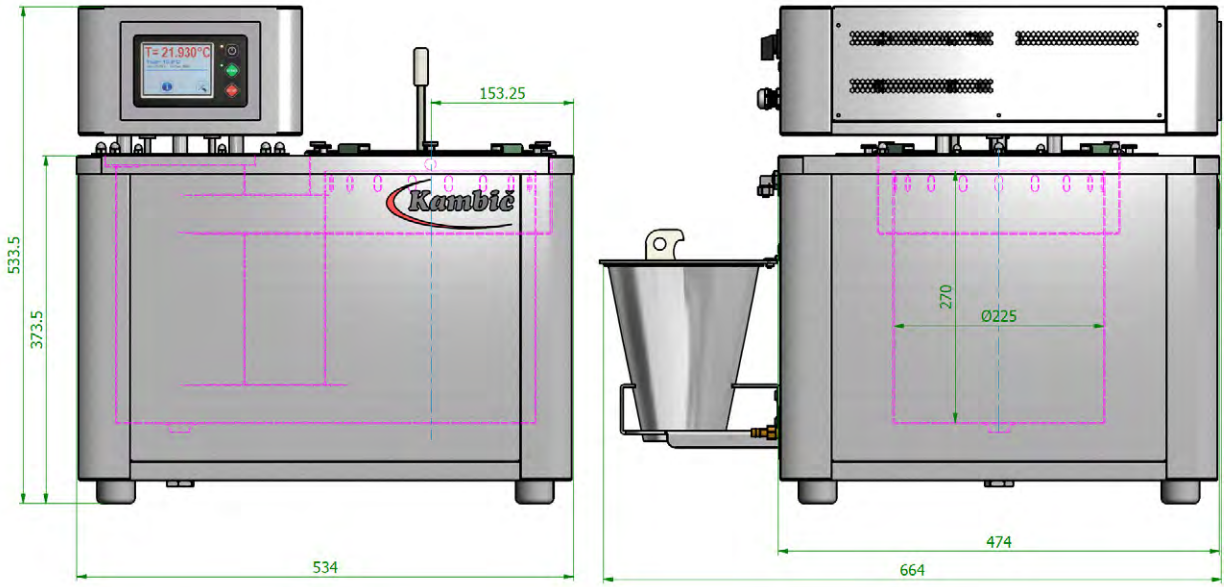

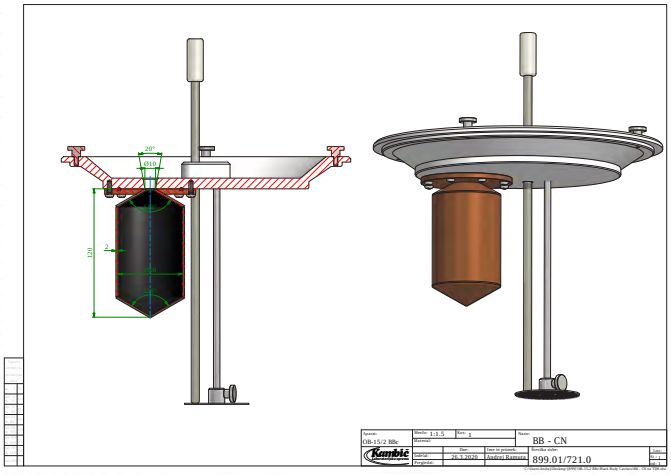
20°
Ø10
120
2
BB - CN
899.01/721.0

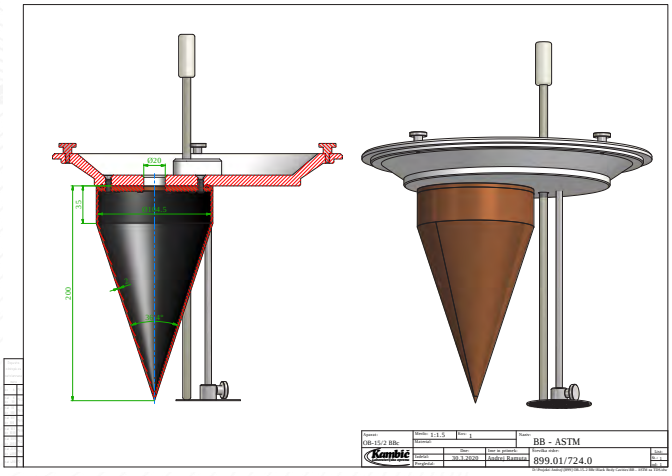
Ø20
35
Ø14.5
200
30°
BB - ASTM
899.01/724.0

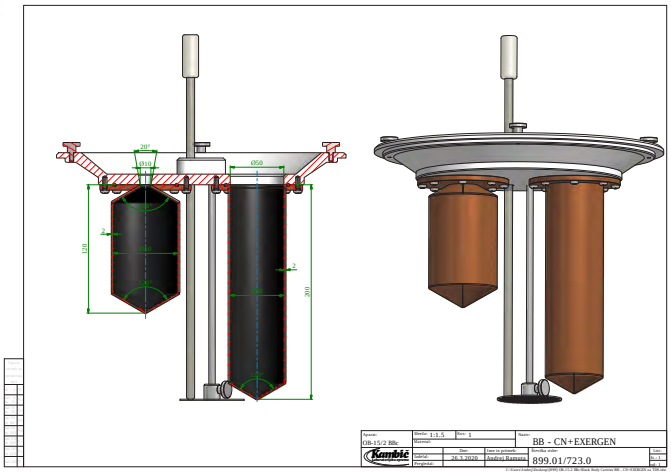
20°
Ø10
Ø50
120
2
200
BB - CN+EXERGEN
899.01/723.0

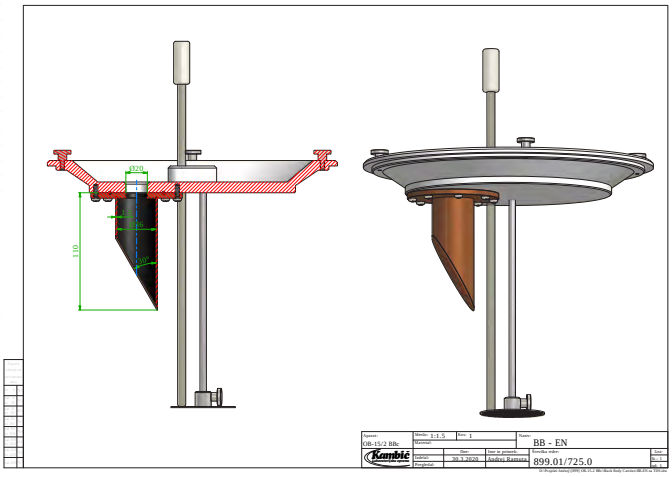
Ø20
110
BB - EN
899.01/725.0

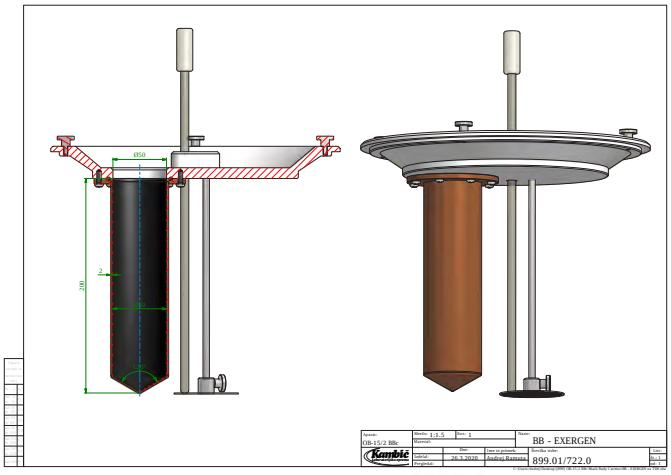
Ø50
200
2
BB - EXERGEN
899.01/722.0

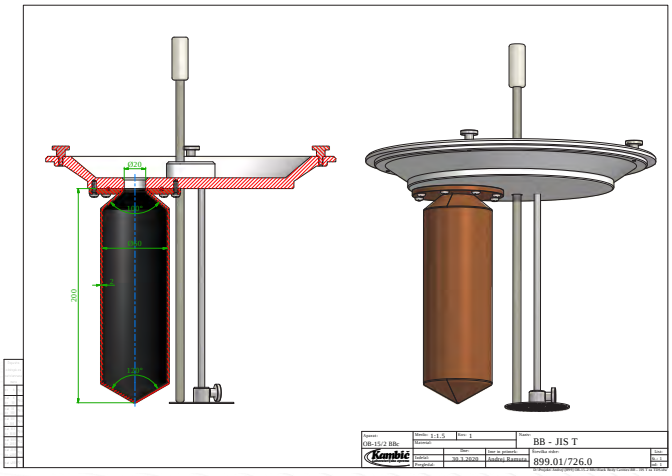
Ø20
Ø10
Ø50
200
120°
BB - JIS T
899.01/726.0